Creating long term solutions to age old problems.

The SMART W Square Chafing Dish w/ Stainless Steel Lid, Stainless Steel 1A15703

The SMART W Square Chafing Dish is a stylish, high-volume catering chafer that can hold up to 5.8 qt of appetizers, main dishes, or sides. It features an elegant stainless steel lid, auto-close lid, water recycling functionality, and a cladded water pan for even heat distribution.

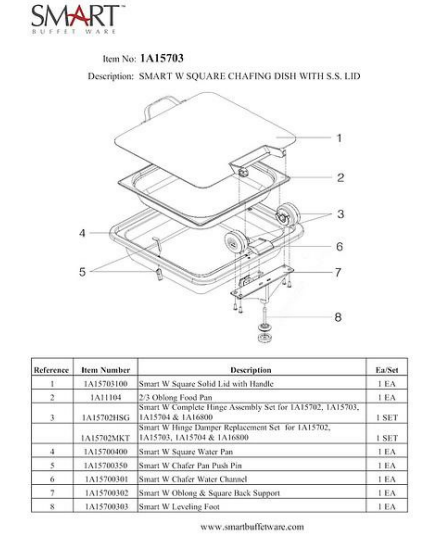

Item No: **1A15703**

Description: SMART W SQUARE CHAFING DISH WITH S.S. LID

Reference	Item Number	Description	Ea/Set
1	1A15703100	Smart W Square Solid Lid with Handle	1 EA
2	1A11104	2/3 Oblong Food Pan	1 EA
3	1A15702HSG	Smart W Complete Hinge Assembly Set for 1A15702, 1A15703, 1A15704 & 1A16800	1 SET
	1A15702MKT	Smart W Hinge Damper Replacement Set for 1A15702, 1A15703, 1A15704 & 1A16800	1 SET
4	1A15700400	Smart W Square Water Pan	1 EA
5	1A15700350	Smart W Chafer Pan Push Pin	1 EA
6	1A15700301	Smart W Chafer Water Channel	1 EA
7	1A15700302	Smart W Oblong & Square Back Support	1 EA
8	1A15700303	Smart W Leveling Foot	1 EA

www.smartbuffetware.com

Accessories

1A11103

1/3 Oblong Food Pan, Stainless Steel

1A11104

The 2/3 Oblong Food Pan, Stainless Steel

1A11209

The 2/3 Oblong Food Pan, Porcelain

© 2010–2024 SMART Buffet Ware

Creating long term solutions to age old problems.

1A11208

The 1/3 Oblong Food Pan, Porcelain

1A11272

SMART W Detachable Serving Spoon Holder Set, Stainless Steel & Porcelain

1A11265

The SMART W Square Removable Base, Stainless Steel

1A11516

Drip Tray, for 1/3 Oblong Size Food Pan

1AIW19406SET

Domino Rectangle Induction Platform Set, Wood

1AIW19405SET

Domino Square Induction Platform Set, Wood

1ARECPSET

Domino Rectangle Induction Platform Set, Black Phenolic

1A11314WHT

The 2/3 Oblong Food Pan, Stainless Steel, Porcelain Coated

1A11313WHT

1/3 Oblong Food Pan, Stainless Steel, Porcelain Coated

1A11275

Smart W Square Removable Base, Stainless Steel, Stackable

Included Accessories

© 2010–2024 SMART Buffet Ware

Creating long term solutions to age old problems.

1A11104

The 2/3 Oblong Food Pan, Stainless Steel

© 2010–2024 SMART Buffet Ware